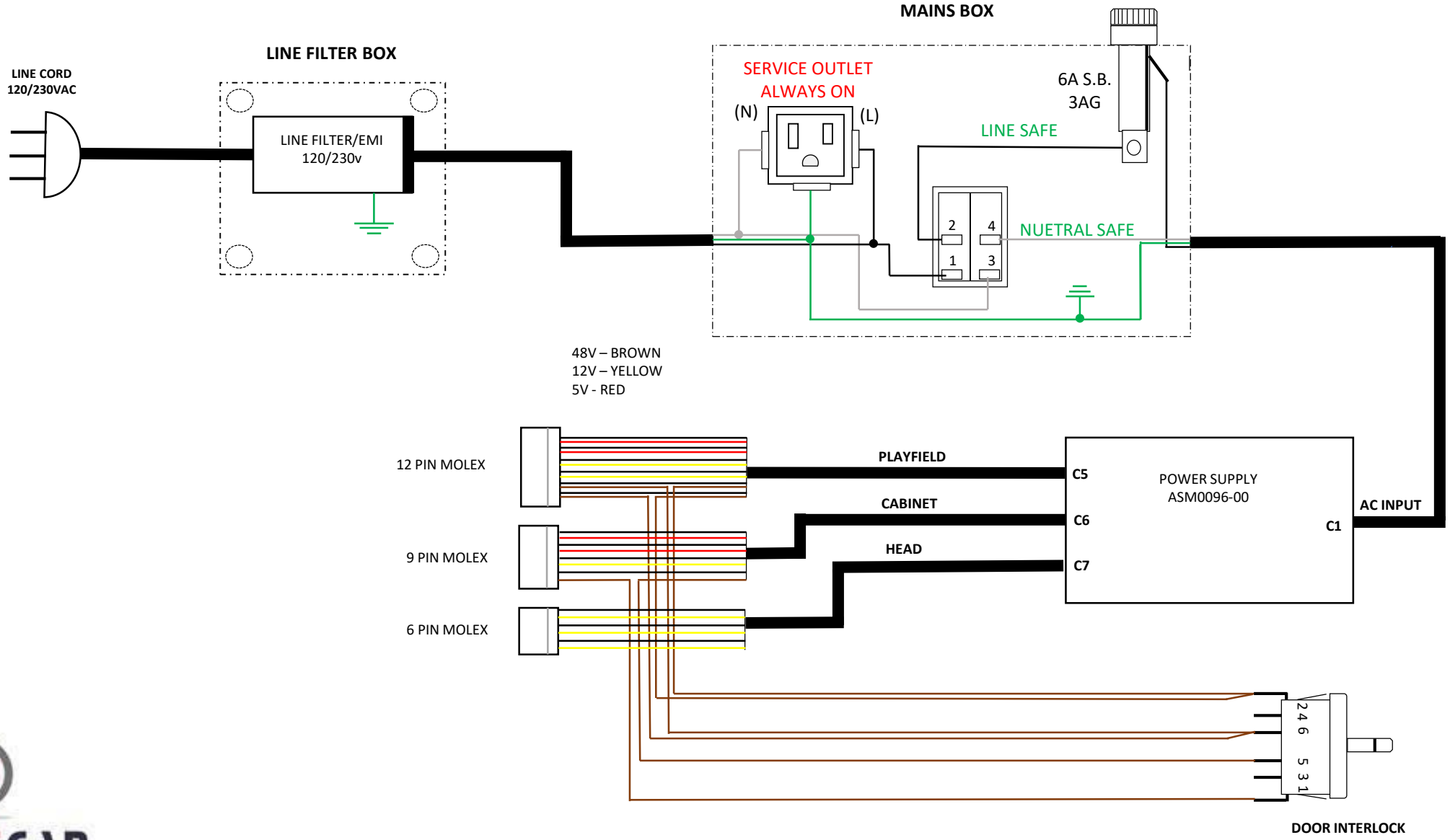

Pinball Power System Diagram V1.02

BTA WAS HERE 2018